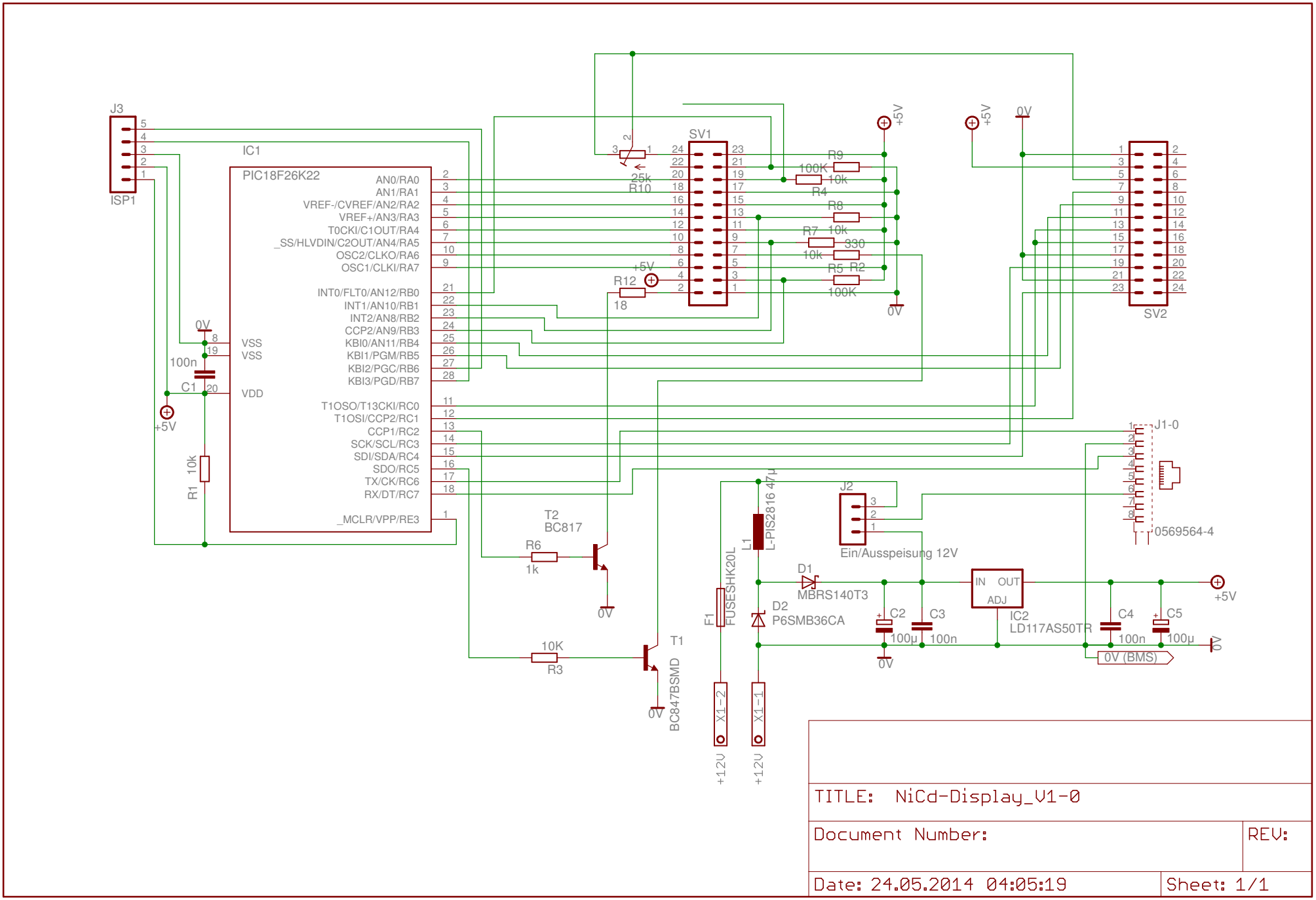

25.05.2014 23:27:45 C:\Programme\EAGLE-6.5.0\projects\NiCd-Display_V1-0.sch (Sheet: 1/1)