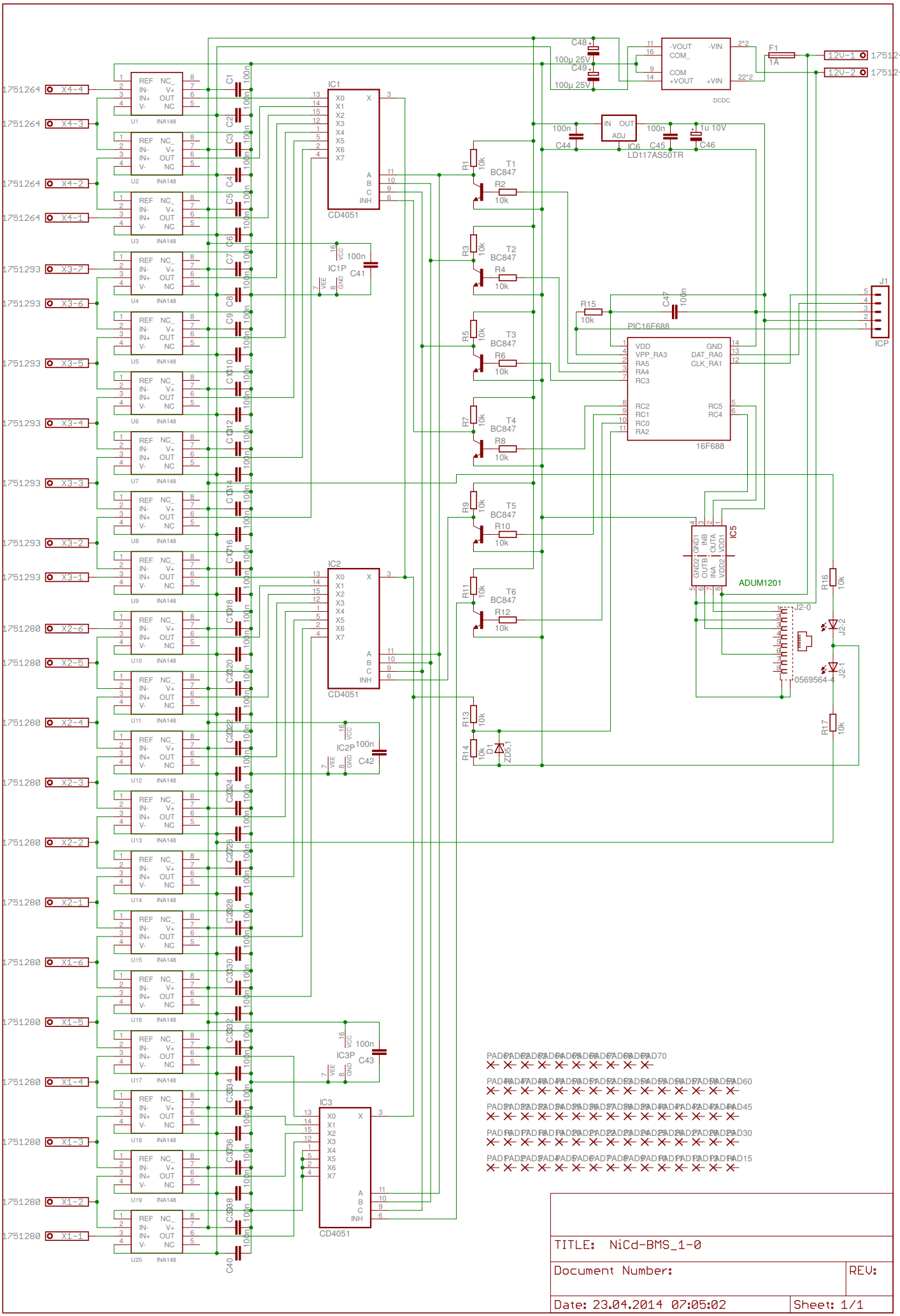

25.05.2014 23:26:24 f=0.70 C:\Programme\EAGLE-6.5.0\projects\NiCd-BMS_1-0.sch (Sheet: 1/1)